# SANGAMON CENTER NORTH

COLDWELL BANKER COMMERCIAL
DEVONSHIRE REALTY

## 1861 E. Sangamon Ave,
Springfield, IL 62702

## AVAILABLE

1939: 2,722 SF
Cell Tower Site
ATM Site

**Blake Pryor**

Vice President

**O:** 217.547.6650

**C:** 217.725.9518

**bpryor@cbcdr.com**



**COLDWELL BANKER COMMERCIAL**
**DEVONSHIRE REALTY**
Springfield, IL
217-547-6650



©2023 Coldwell Banker. All Rights Reserved. Coldwell Banker Commercial® and the Coldwell Banker Commercial logos are trademarks of Coldwell Banker Real Estate LLC. The Coldwell Banker® System is comprised of company owned offices which are owned by a subsidiary of Anywhere Advisors LLC and franchised offices which are independently owned and operated. The Coldwell Banker System fully supports the principles of the Equal Opportunity Act.

# USE AGREEMENT

COLDWELL BANKER COMMERCIAL
DEVONSHIRE REALTY

## CONFIDENTIALITY AND RESTRICTED USE AGREEMENT

This Confidential Investment Summary ("CIS") is provided by Coldwell Banker Commercial Devonshire Realty ("CBCDR"), solely for your consideration of the opportunity to acquire the commercial property described herein (the "Property"). This CIS may be used only as stated herein and shall not be used for any other purpose, or in any other manner, without prior written authorization and consent of CBCDR. This CIS does not constitute or pertain to an offer of a security or an offer of any investment contract. This CIS contains descriptive materials, financial information and other data compiled by CBCDR for the convenience of parties who may be interested in the Property. Such information is not all inclusive and is not represented to include all information that may be material to an evaluation of the acquisition opportunity presented. CBCDR has not independently verified any of the information contained herein and makes no representations or warranties of any kind concerning the accuracy or completeness thereof. All summaries and discussions of documentation and/or financial information contained herein are qualified in their entirety by reference to the actual documents and/or financial statements, which upon request may be made available. An interested party must conduct its own independent investigation and verification of any information the party deems material to consideration of the opportunity, or otherwise appropriate, without reliance upon CBCDR.

The Property may be financed or withdrawn from the market without notice, and its owner(s) reserve(s) the right to negotiate with any number of interested parties at any time. The Property is offered and sold by its owner(s) as is, where is, and with all faults, without representation or warranty of any kind except for any customary warranties of title.

**BY ACCEPTING THIS CIS, YOU AGREE THAT:** (1) all information contained herein, and all other information you have received or may hereafter receive from CBCDR relating to the Property, whether oral, written or in any other form (collectively, the "Information"), is strictly confidential; (2) you will not copy or reproduce, and claim as your own without attribution to CBCDR, all or any part of this CIS or the Information; (3) upon request by CBCDR at any time, you will return and/or certify your complete destruction of all copies of this CIS and the Information; (4) for yourself and all your affiliates, officers, employees, representatives, agents and principals, you hereby release and agree to indemnify and hold harmless CBCDR all of its affiliates, officers, employees, representatives, agents and principals, from and with respect to any and all claims and liabilities arising from or related to the receipt or use of this CIS and/or any other Information concerning the Property; (5) you will not provide this CIS or any of the Information to any other party unless you first obtain such party's acceptance and approval of all terms, conditions, limitations and agreements set forth herein, as being applicable to such party as well as to you; and (6) monetary damages alone will not be an adequate remedy for a violation of these terms and that CBCDR shall be entitled to equitable relief, including, but not limited to, injunctive relief and specific performance, in connection with such a violation and shall not be required to post a bond when obtaining such relief.

**COLDWELL BANKER COMMERCIAL**
**DEVONSHIRE REALTY**
Springfield, IL
217-547-6650

©2023 Coldwell Banker. All Rights Reserved. Coldwell Banker Commercial® and the Coldwell Banker Commercial logos are trademarks of Coldwell Banker Real Estate LLC. The Coldwell Banker® System is comprised of company owned offices which are owned by a subsidiary of Anywhere Advisors LLC and franchised offices which are independently owned and operated. The Coldwell Banker System fully supports the principles of the Equal Opportunity Act.

# OVERVIEW

COLDWELL BANKER COMMERCIAL
DEVONSHIRE REALTY

Sangamon Center North is a Schnucks-anchored neighborhood shopping center serving Springfield, IL the past 40+ years. The site has high visibility with main road frontage, easily accessible with several curb cuts, and heavily traveled at 16,900 AADT. The site is minutes away from the Illinois State Fairgrounds, Interstate 55, and Interstate 72. The Landlord prides itself on timely responses, productive tenant relations, professional management, and frequent maintenance and upkeep. There is plenty of on-site parking.

Currently, there are is 1 unit available for lease. 1939 E. Sangamon Ave is a 2,722 SF space located in the freestanding strip mall addition to the center. It features a large open layout with 1 restroom and a storage area. The Landlord would accommodate a cell tower site, an ATM site, or some other small ground lease or build-to-suit opportunity.

The Center co-tenants include Planet Fitness (coming soon), Rent-A-Center, Pizza Hut, USPS, Pet Supplies Plus, and Subway among many others.

## PROPERTY INFORMATION

| | |
|---|---|
| **MAIN ADDRESS** | 1861 E. Sangamon Ave., Springfield, IL 62702 |
| **LEASE PRICE** | $8.00 / SF/ NNN |
| **AVAILABLE SPACE** | 1939 – 2,722 SF |
| **NNN ESTIMATE** | $3.84 / SF |
| **ZONING** | B-1; S-2 |
| **PARKING** | Ample |

**COLDWELL BANKER COMMERCIAL**
**DEVONSHIRE REALTY**
Springfield, IL
217-547-6650

©2023 Coldwell Banker. All Rights Reserved. Coldwell Banker Commercial® and the Coldwell Banker Commercial logos are trademarks of Coldwell Banker Real Estate LLC. The Coldwell Banker® System is comprised of company owned offices which are owned by a subsidiary of Anywhere Advisors LLC and franchised offices which are independently owned and operated. The Coldwell Banker System fully supports the principles of the Equal Opportunity Act.

# DEMOGRAPHICS

COLDWELL BANKER COMMERCIAL
DEVONSHIRE REALTY

| POPULATION | 1-MILES | 3-MILES | 5-MILES |
|---|---|---|---|
| **2020 Population (Census)** | 7,356 | 38,196 | 91,003 |
| **2023 Population** | 7,374 | 38,302 | 91,037 |
| **2028 Population (Projected)** | 7,515 | 38,688 | 91,594 |

| HOUSEHOLDS | 1-MILES | 3-MILES | 5-MILES |
|---|---|---|---|
| **2023 Households** | 3,326 | 17,092 | 41,017 |
| **2028 Households (Projected)** | 3,388 | 17,252 | 41,245 |

| INCOME | 1-MILES | 3-MILES | 5-MILES |
|---|---|---|---|
| **2023 Per Capita Income** | $27,810 | $22,841 | $29,592 |
| **2023 Median Household Income** | $57,721 | $43,002 | $53,497 |
| **2023 Average Household Income** | $61,662 | $51,185 | $65,680 |

## AREA OVERVIEW

Subject property is located in north Springfield and just east of the Illinois State Fairgrounds. The property has access to Interstate 55/72 within minutes of the site. The site has high density due to its proximity to many other commercial activity as well large number of households.


**COLDWELL BANKER COMMERCIAL**
**DEVONSHIRE REALTY**
Springfield, IL
217-547-6650



©2023 Coldwell Banker. All Rights Reserved. Coldwell Banker Commercial® and the Coldwell Banker Commercial logos are trademarks of Coldwell Banker Real Estate LLC. The Coldwell Banker® System is comprised of company owned offices which are owned by a subsidiary of Anywhere Advisors LLC and franchised offices which are independently owned and operated. The Coldwell Banker System fully supports the principles of the Equal Opportunity Act.

# AERIAL

COLDWELL BANKER COMMERCIAL
DEVONSHIRE REALTY

**COLDWELL BANKER COMMERCIAL**
**DEVONSHIRE REALTY**
Springfield, IL
217-547-6650

©2023 Coldwell Banker. All Rights Reserved. Coldwell Banker Commercial® and the Coldwell Banker Commercial logos are trademarks of Coldwell Banker Real Estate LLC. The Coldwell Banker® System is comprised of company owned offices which are owned by a subsidiary of Anywhere Advisors LLC and franchised offices which are independently owned and operated. The Coldwell Banker System fully supports the principles of the Equal Opportunity Act.

# SITE PLAN

COLDWELL BANKER COMMERCIAL
DEVONSHIRE REALTY

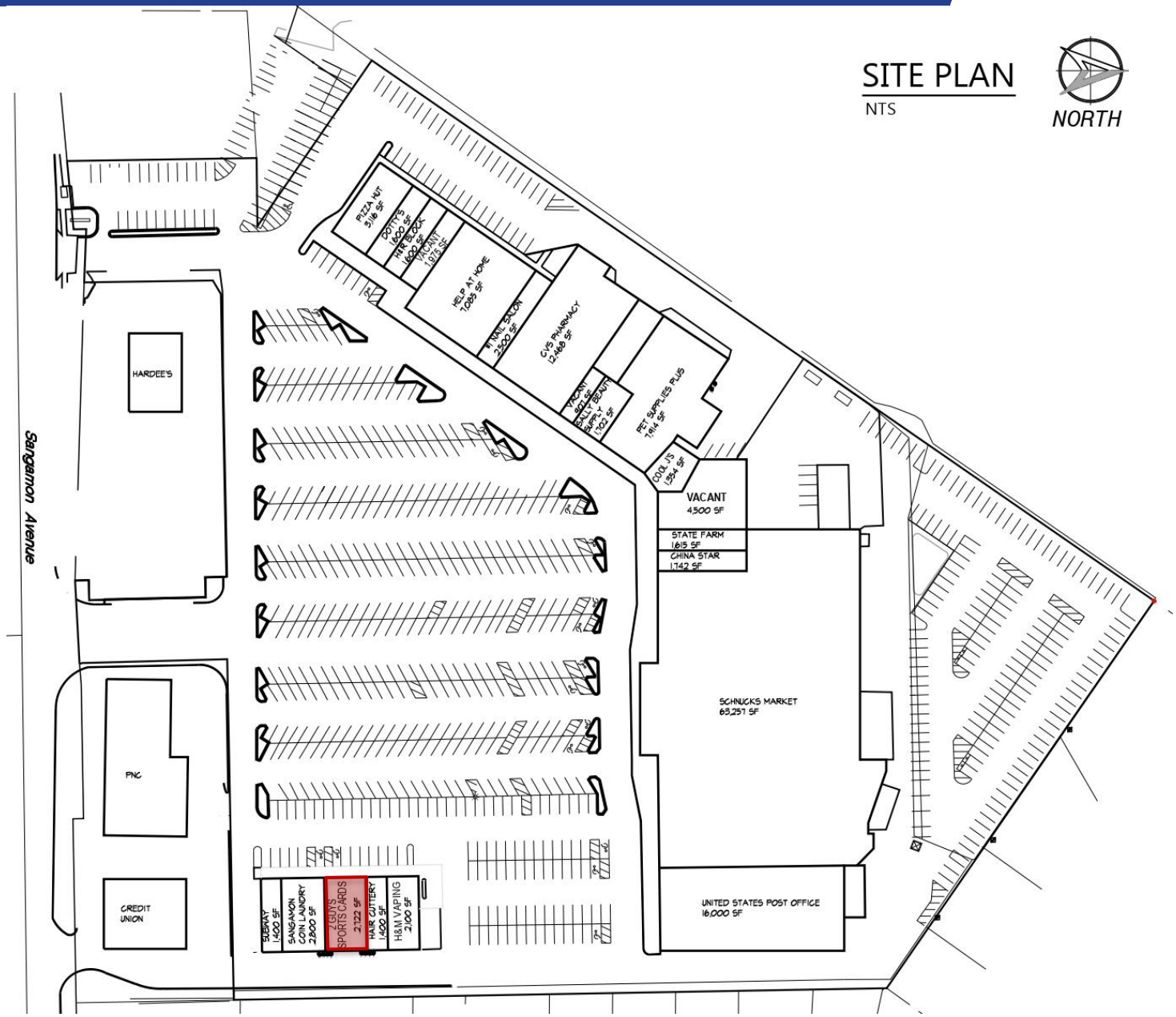



**COLDWELL BANKER COMMERCIAL**
**DEVONSHIRE REALTY**
Springfield, IL
217-547-6650



©2023 Coldwell Banker. All Rights Reserved. Coldwell Banker Commercial® and the Coldwell Banker Commercial logos are trademarks of Coldwell Banker Real Estate LLC. The Coldwell Banker® System is comprised of company owned offices which are owned by a subsidiary of Anywhere Advisors LLC and franchised offices which are independently owned and operated. The Coldwell Banker System fully supports the principles of the Equal Opportunity Act.

# FLOOR PLAN – 2,722 SF

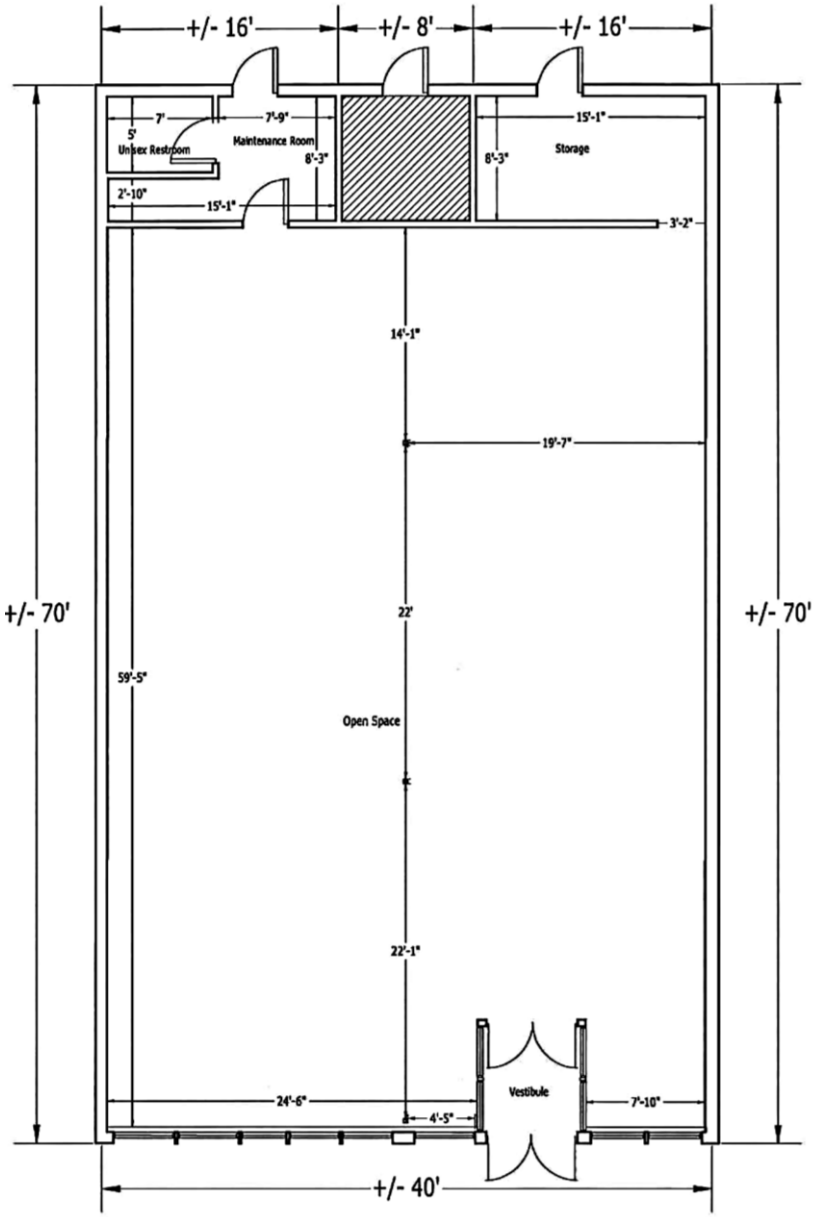


**COLDWELL BANKER COMMERCIAL**
**DEVONSHIRE REALTY**
Springfield, IL
217-547-6650

©2023 Coldwell Banker. All Rights Reserved. Coldwell Banker Commercial® and the Coldwell Banker Commercial logos are trademarks of Coldwell Banker Real Estate LLC. The Coldwell Banker® System is comprised of company owned offices which are owned by a subsidiary of Anywhere Advisors LLC and franchised offices which are independently owned and operated. The Coldwell Banker System fully supports the principles of the Equal Opportunity Act.

# EXTERIOR

COLDWELL BANKER COMMERCIAL
DEVONSHIRE REALTY

**COLDWELL BANKER COMMERCIAL**
**DEVONSHIRE REALTY**
Springfield, IL
217-547-6650

©2023 Coldwell Banker. All Rights Reserved. Coldwell Banker Commercial® and the Coldwell Banker Commercial logos are trademarks of Coldwell Banker Real Estate LLC. The Coldwell Banker® System is comprised of company owned offices which are owned by a subsidiary of Anywhere Advisors LLC and franchised offices which are independently owned and operated. The Coldwell Banker System fully supports the principles of the Equal Opportunity Act.

# CONTACT

COLDWELL BANKER COMMERCIAL
DEVONSHIRE REALTY

## Blake Pryor

Vice President

**O:** 217.547.6650

**C:** 217.725.9518

**bpryor@cbcdr.com**


## CBCDR Office

**201 W. Springfield Ave., 11th Floor**

Champaign, IL 61820

## PROPERTY HIGHLIGHTS

- Professionally Managed & Well-Maintained
- Plenty of Parking
- High Visibility
- Surrounded by Schnucks, USPS, Pizza Hut, Planet Fitness, RAC, and more
- Cell Tower Site, ATM Site, Ground Lease/Build-to-Suit Available




©2023 Coldwell Banker. All Rights Reserved. Coldwell Banker Commercial® and the Coldwell Banker Commercial logos are trademarks of Coldwell Banker Real Estate LLC. The Coldwell Banker® System is comprised of company owned offices which are owned by a subsidiary of Anywhere Advisors LLC and franchised offices which are independently owned and operated. The Coldwell Banker System fully supports the principles of the Equal Opportunity Act.